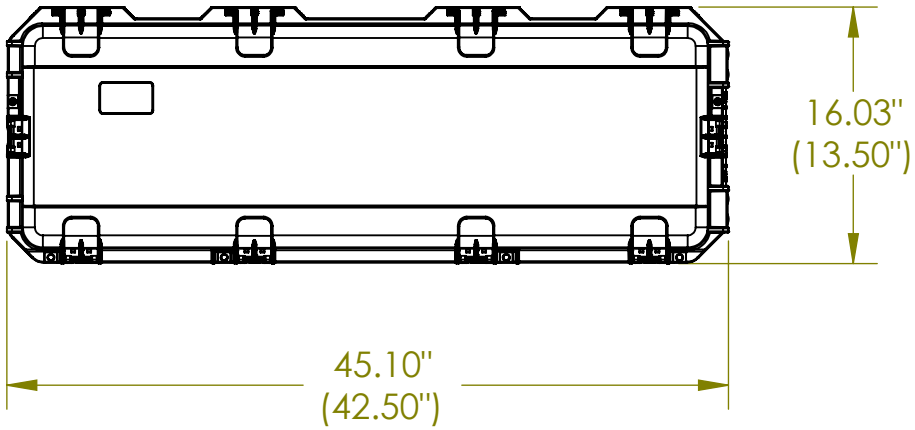

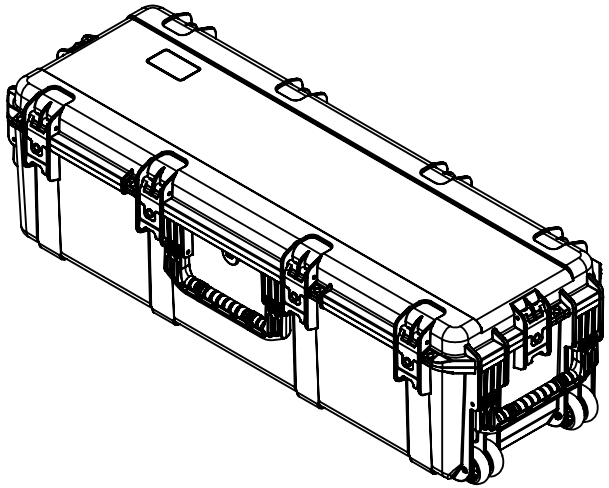

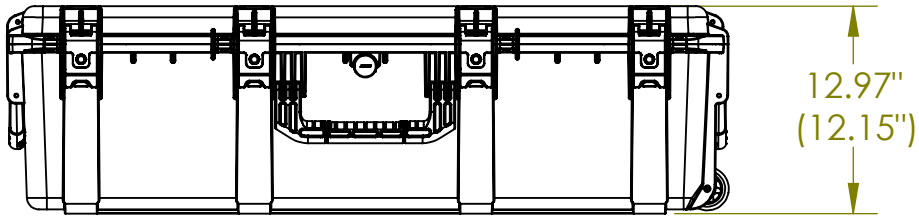

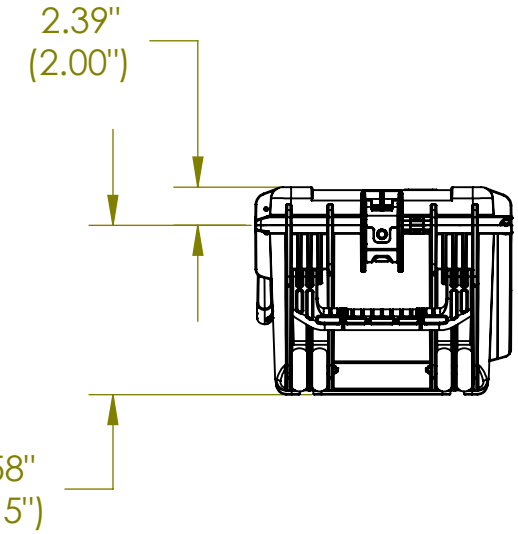

3i-4213-12

NOTE: DIMENSIONS IN (X.XX) ARE ID

434 West Levers Place
Orange, CA 92867
Phone: (714) 637-1252
Fax: (714) 637-0491
http://www.skbcases.com

Case Series:	3i Series	Dimensions (for reference only)			
Case part#	3i-4213-13		Length	Width	Overall	Base / Lid
			left to right	front to back	height	height
Weight:		Exterior	45.50"	16.03"	12.97"	10.58"/2.39"
		Inerior	42.50"	13.50"	12.15"	10.15"/2.00"

5 4 3 2 1